LUBRICATION ORDER
1 July 1985

TRUCK TRACTOR, YARD TYPE, 43500 LB GVW, DED, 4X2
M878A1 (2320-01-121-2102)

Reference TM 9-2320-285-10, TM 9-2320-285-24, TM 9-2320-285-24P

Intervals and the related man-hour times are based on normal operation. The man-hour time specified is the time you need to do all the services prescribed for a particular interval. Change the interval if your lubricants are contaminated or if you are operating the equipment under adverse operating conditions, including long-than-usual operating hours. You may extend the interval during periods of low activity, but you must take adequate preservation precautions. Clean fittings before lubricating. Clean parts with solvent, dry cleaning (SD-2). Dry before lubricating. Dashed arrow points indicate lubrication on both sides of the equipment.

The lowest level of maintenance authorized to lubricate a point is indicated by one of the following symbols as appropriate: Operator/crew (C); and Organizational Maintenance (0).

You can improve this publication by calling attention to errors and by recommending improvements and by stating your reasons for the recommendations. Your letter or DA Form 2028, Recommended Changes to Publications and Forms should be mailed directly to Commander, US Army Tank-Automotive Command, ATTN: AMSTA-MB, Warren, MI 48397-5000. A reply will be furnished directly to you.

FOLD FOLD

LUBRICANT • INTERVAL

Rocker Arm Cover Breathers Remove, clean, dry, (O) and install	SD-2	500
Engine Oil Filter (O) (See note 1)	—	100
Engine Crankcase Drain (O) (See note 1)	—	100
Transmission Vent (O) Remove, clean, dry, and install	SD-2	500
Transmission Modulator Cable (O) Apply at engine end of cable; use Dexron-II fluid only	FTD	500
Gear Shift, Control Valve, and Speedometer Cables (O) Grease both ends of cables	GIA	500
Transmission Governor Filter (O) (See note 3)	—	500
Universal Joints and (O) Slip Yoke	GAA	500
Fifth Wheel Jaw Pins (C) 2 oil can points	OE	50

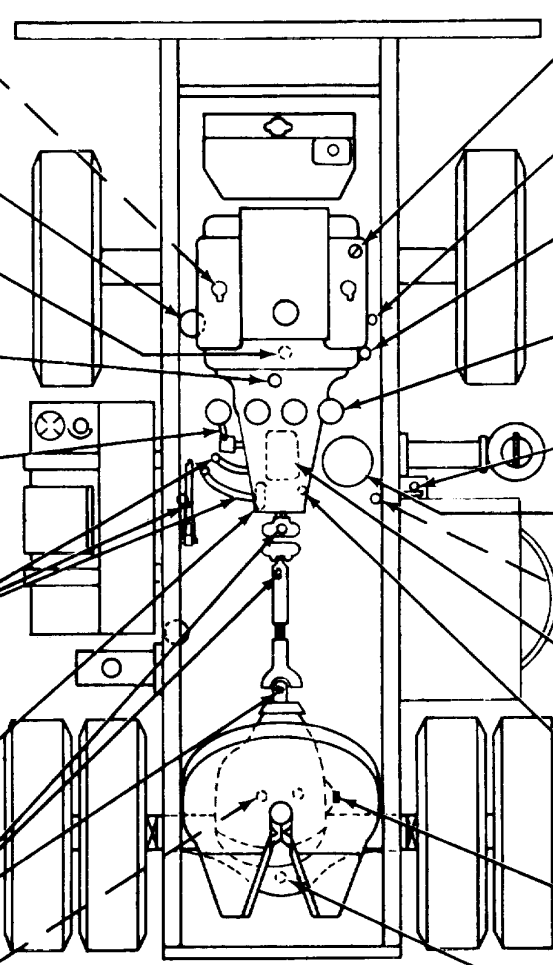

TOP VIEW

INTERVAL • LUBRICANT

100	OE	Engine Crankcase Fill (See note 1) (C)
D	—	Engine Oil Level Dipstick Check level (C)
D	FTD	Transmission Dipstick and Fill (See note 3) (C)
500	—	Transmission External Fluid Filter (See note 3) (O)
500	FTD	Cab Tilt Reservoir Fill (See note 4) (O)
100	—	Engine Oil Filter Pack and Drain (See note 1) (O)
100	GAA	Boom Pivot Pins 2 Fittings (O)
500	—	Transmission Sump Fluid Filter (See note 3) (O)
500	FTD	Transmission Drain (See note 3) (O)
W	GO	Differential Check and Fill (See note 2) (O)
1000	GO	Differential Drain (See note 2) (O)