TECHNICAL MANUAL

ORGANIZATIONAL, DIRECT SUPPORT, AND GENERAL SUPPORT MAINTENANCE MANUAL (INCLUDING REPAIR PARTS AND SPECIAL TOOLS LIST)

FOR

85' AERIAL LADDER FIRE FIGHTING TRUCK

NSN 4210-00-965-1254

HEADQUARTERS, DEPARTMENT OF THE ARMY
5 NOVEMBER 1986

Parts Catalog

Allison Transmissions
AUTOMATIC MODELS
HT 740D, HT 747D
HT 750CRD, HT 750DRD
HT754CRD
HT 750DRD DB
HT 750DRI

1 AUGUST 1985

Detroit Diesel Allison
Division of General Motors Corporation
Indianapolis, Indiana 46206

NOTE:
This printed parts catalog is published annually. Interim revisions are available only on Microfiche. Either may be purchased from authorized Detroit Diesel Allison service outlets. See your yellow pages under Engines--Diesel or Transmission—Trucks, Tractor. etc.

Printed in U.S.A.

© 1985 General Motors Corp.

MODELS COVERED

On the first page(s) of each section of this catalog, the Allison HT 700 Series transmission models covered in that particular section are listed in numerical sequence by Transmission Assembly Part Number (A/N). A complete A/N listing of all models covered by this catalog can be found In Section 5, starting on page 5-1.1.

YOU MUST KNOW TRANSMISSION ASSEMBLY PART NUMBER (A/N)

To use this catalog you must know the Allison transmission assembly part number (A/N) found on the transmission name plate. The name plate is attached to the right side of transmission housing.

SERVICE KITS

Available service parts kits are listed on page 7.

NUMERICAL INDEX

A numerical Index is included in the rear of this catalog. This Index Is cross-referenced to indicate the history of parts. Parts, both current and superseded, appear in numerical order In the Part No. column. Current part numbers refer to the figure and reference numbers of the parts. Parts replacing older parts are followed by the older part number In the history column. Parts that have been replaced are followed by the part number of the replacing part. Footnote symbols show when a part Is replaced by (RB), or when a part replaces (R) an older part.

CROSS SECTION

Cross sectional views of the transmissions are shown on foldouts at the back of this catalog.

HOW TO ORDER PARTS

If an assembly or subassembly Is ordered, all subassemblies and detail parts Indented beneath It will be included.

If a detail part is ordered, only the detail part will be sent unless Its part number Is starred (*). A starred (*) part number means that such a part Is not serviced alone. This Is necessary because certain parts require factory installation or adjustment. If an order is received for a starred (*) part, the assembly or subassembly under which It Is Indented will be sent.

NOTE

All parts orders must be directed to your dealer -- do not send them to Detroit Diesel Allison. Always Include the transmission model, the transmission assembly number, and serial number when ordering parts. Be sure to Include part name and part number.

WARRANTY

Detroit Diesel Allison sincerely believes It offers the finest parts warranty In the Industry. It Is constantly reviewed to assure It remains competitive. We urge you to ask about It at your local Detroit Diesel Allison Distributor.

COPYRIGHT 1983 GENERAL MOTORS CORP.

ALLISON AUTOMATIC TRANSMISSION HT 700 SERIES PARTS CATALOG
HOW TO USE THIS CATALOG
Example: To find the part number of the torque converter turbine, follow the procedure outlined below.

1 Obtain the transmission assembly part number (P/N or A/N) and serial number shown on the name plate. As I llustrated, it reads 6882710.

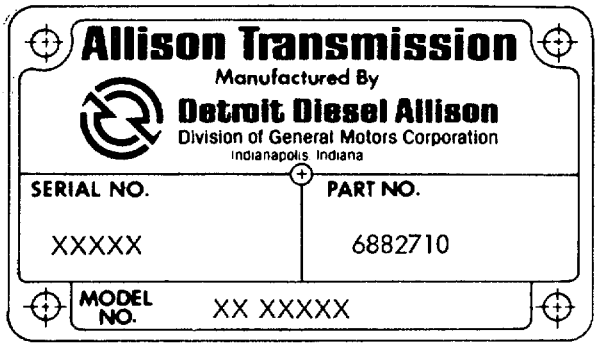

2 Turn to the pictorial Index of exploded parts. The torque converter turbine is shown in the Torque converter and Lockup Clutch Section which is referenced to page 2-1.1

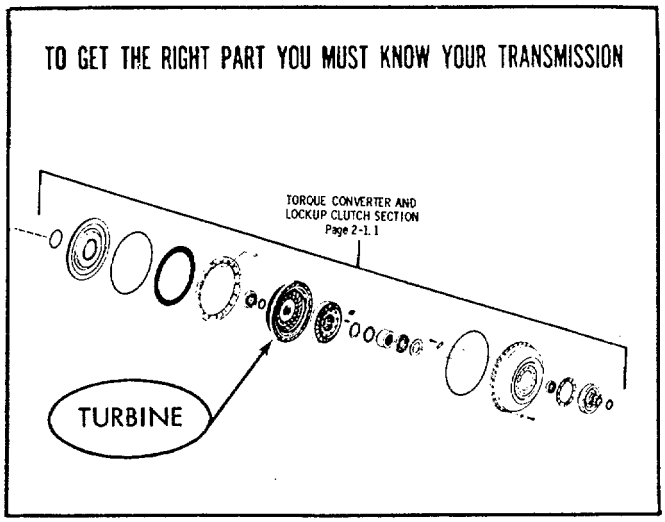

3 Beginning on page 2-1.1, listed in numerical sequence, are the transmission assembly numbers (A/N) of the various models. Under the A/N column you will find the A/N 6882710. Opposite this number under the group listing column you will find the group letter A.

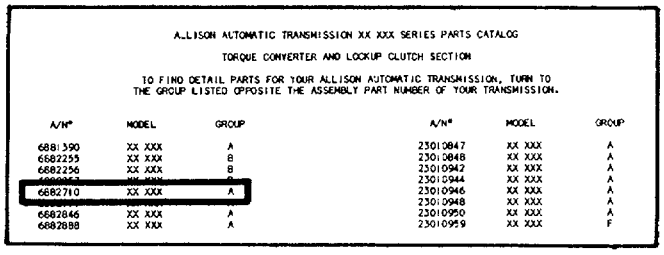

ALLISON AUTOMATIC TRANSMISSION XX XXX SERIES PARTS CATALOG

TORQUE CONVERTER AND LOCKUP CLUTCH SECTION

TO FIND DETAIL PARTS FOR YOUR ALLISON AUTOMATIC TRANSMISSION, TURN TO THE GROUP LISTED OPPOSITE THE ASSEMBLY PART NUMBER OF YOUR TRANSMISSION.

A/N#	MODEL	GROUP	A/N#	MODEL	GROUP
6881390	XX XXX	A	23010847	XX XXX	A
6882255	XX XXX	B	23010848	XX XXX	A
6882256	XX XXX	B	23010942	XX XXX	A
[illegible]	[illegible]	[illegible]	23010944	XX XXX	A
6882710	XX XXX	A	23010946	XX XXX	A
[illegible]	[illegible]	[illegible]	23010948	XX XXX	A
6882846	XX XXX	A	23010950	XX XXX	A
6882888	XX XXX	A	23010959	XX XXX	F

4 Turning to Group A, the group Illustration is referenced as Figure 2; the torque converter turbine Is referenced as Item 9 on the Illustration; the part number is listed as 6839975. Opposite the part number, on the right side of the page, Is a quantity recommended for spare parts, based on the quantity of units (transmission) Indicated on the heading.

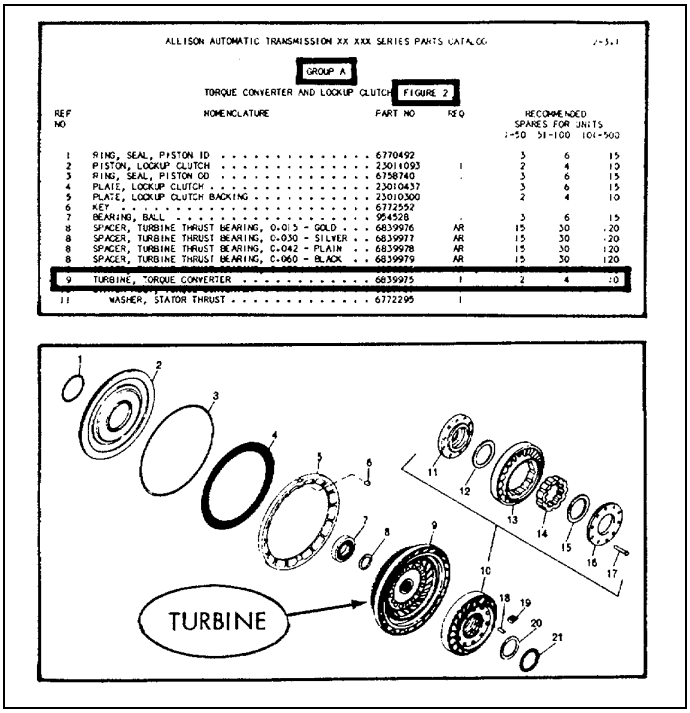

ALLISON AUTOMATIC TRANSMISSION XX XXX SERIES PARTS CATALOG 2-5.1

GROUP A

TORQUE CONVERTER AND LOCKUP CLUTCH FIGURE 2

REF NO	NOMENCLATURE	PART NO	REQ	RECOMMENDED SPARES FOR UNITS 1-50	51-100	101-500
1	RING, SEAL, PISTON ID	6770492		3	6	15
2	PISTON, LOCKUP CLUTCH	23011093	1	2	4	10
3	RING, SEAL, PISTON OD	6758740		3	6	15
4	PLATE, LOCKUP CLUTCH	23010437		3	6	15
5	PLATE, LOCKUP CLUTCH BACKING	23010300		2	4	10
6	KEY	6772552				
7	BEARING, BALL	904528		3	6	15
8	SPACER, TURBINE THRUST BEARING, 0.015 - GOLD	6839976	AR	15	30	120
8	SPACER, TURBINE THRUST BEARING, 0.030 - SILVER	6839977	AR	15	30	120
8	SPACER, TURBINE THRUST BEARING, 0.042 - PLAIN	6839978	AR	15	30	120
8	SPACER, TURBINE THRUST BEARING, 0.060 - BLACK	6839979	AR	15	30	120
[illegible]	[illegible]	[illegible]	[illegible]	[illegible]	[illegible]	[illegible]
9	TURBINE, TORQUE CONVERTER	6839975	1	2	4	10
[illegible]	[illegible]	[illegible]	[illegible]	[illegible]	[illegible]	[illegible]
11	WASHER, STATOR THRUST	6772295	1			

NOTE

Use the basic procedure explained above to locate any part number required. Also, refer to the opposite page for numerical usage and additional parts ordering Informatlon.

COPYRIGHT 1983 GENERAL MOTORS CORP.

TO GET THE RIGHT PART YOU UST KNOW YOUR TRANSMISSION

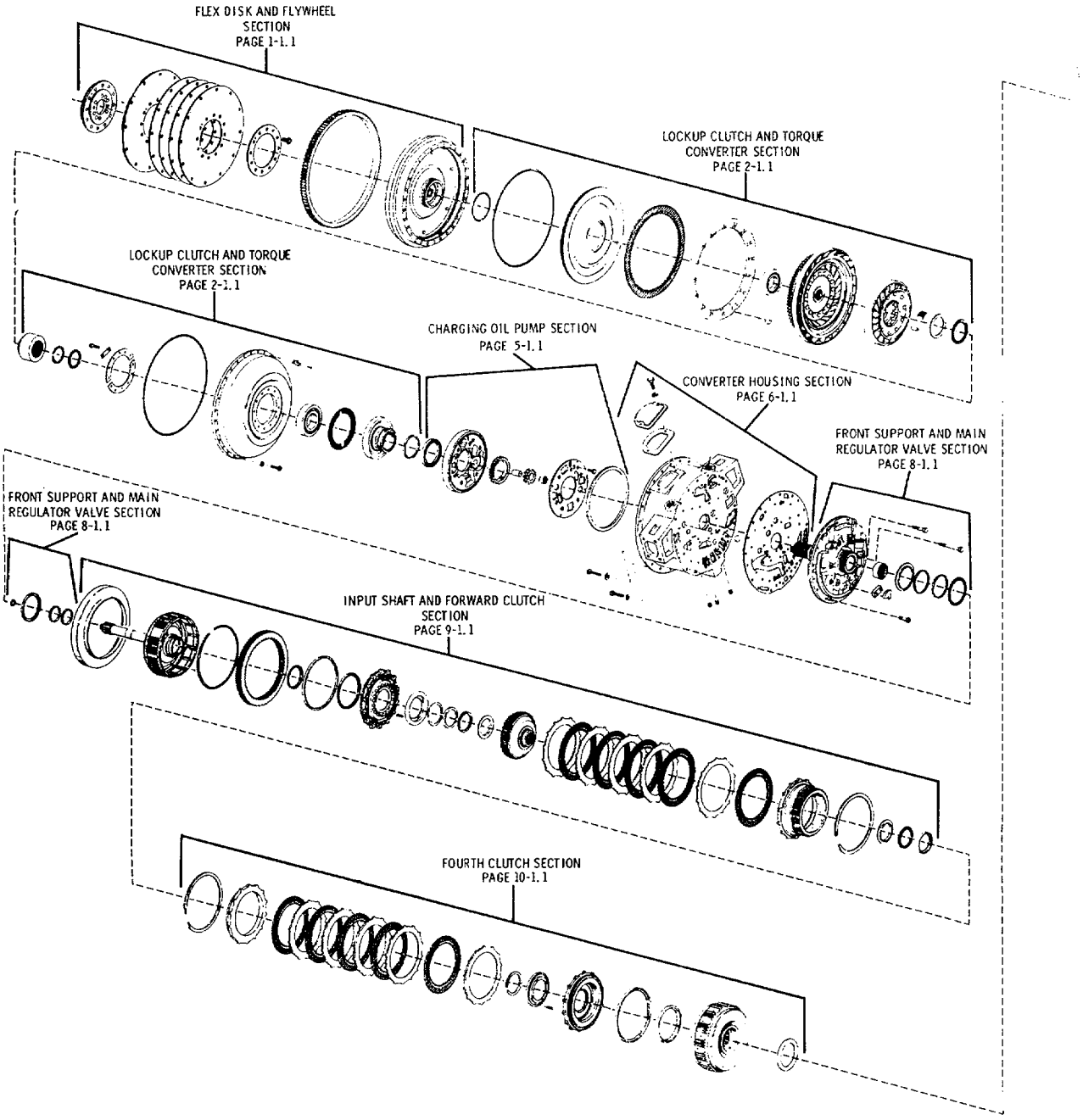

HT 740D AUTOMATIC TRANSMISSION PICTORIAL INDEX

COPYRIGHT 1983 GENERAL MOTORS CORP. 06-15-83

ASSEMBLY NUMBER FOUND ON THE TRANSMISSION NAME PLATE

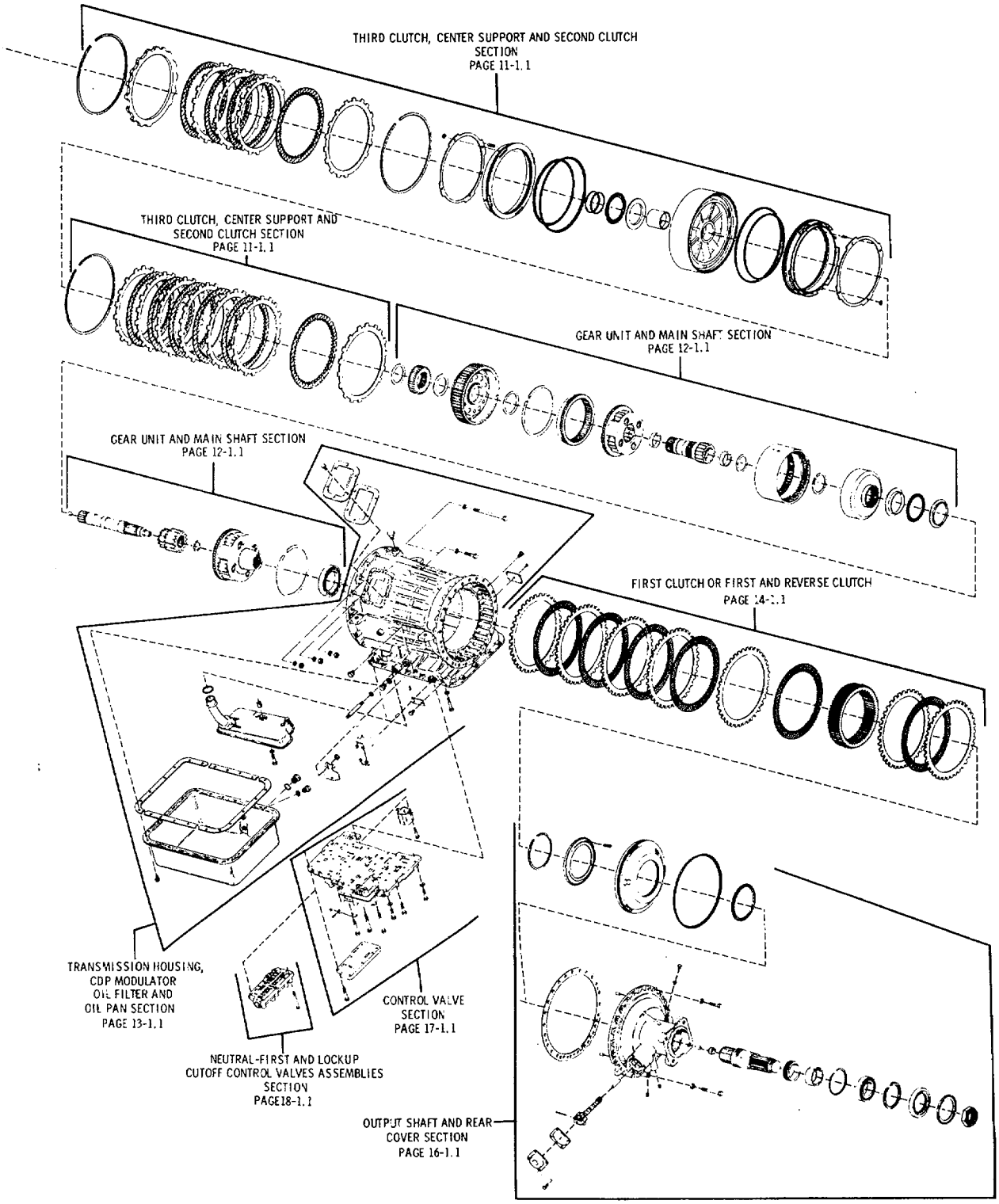

HT 740D AUTOMATIC TRANSMISSION PICTORIAL INDEX

COPYRIGHT 1983 GENERAL MOTORS CORP.

TO GET THE RIGHT PART YOU MUST KNOW YOUR TRANSMISSION

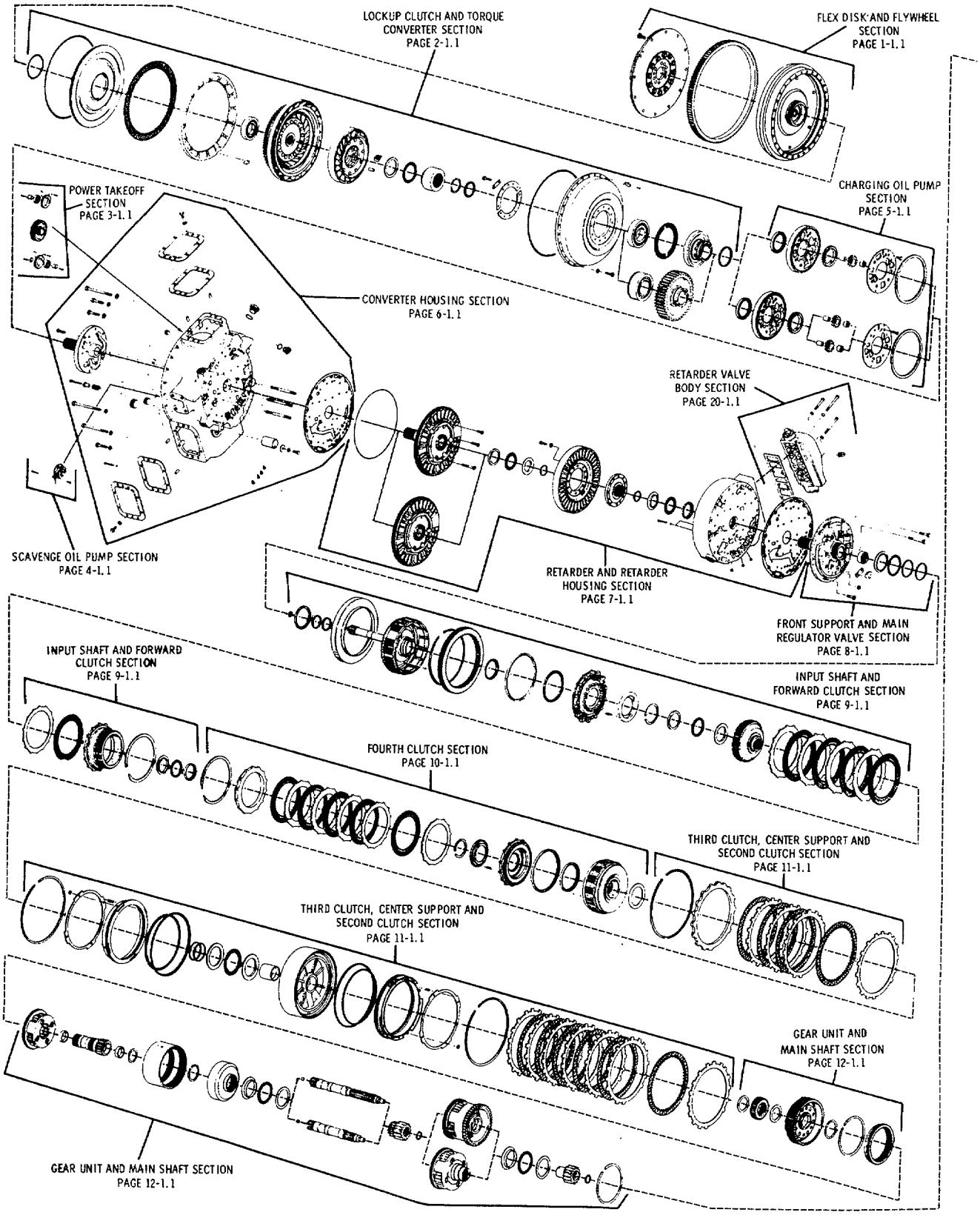

COPYRIGHT 1983 GENERAL MOTORS CORP.

ASSEMBLY NUMBER FOUND ON THE TRANSMISSION NAME PLATE

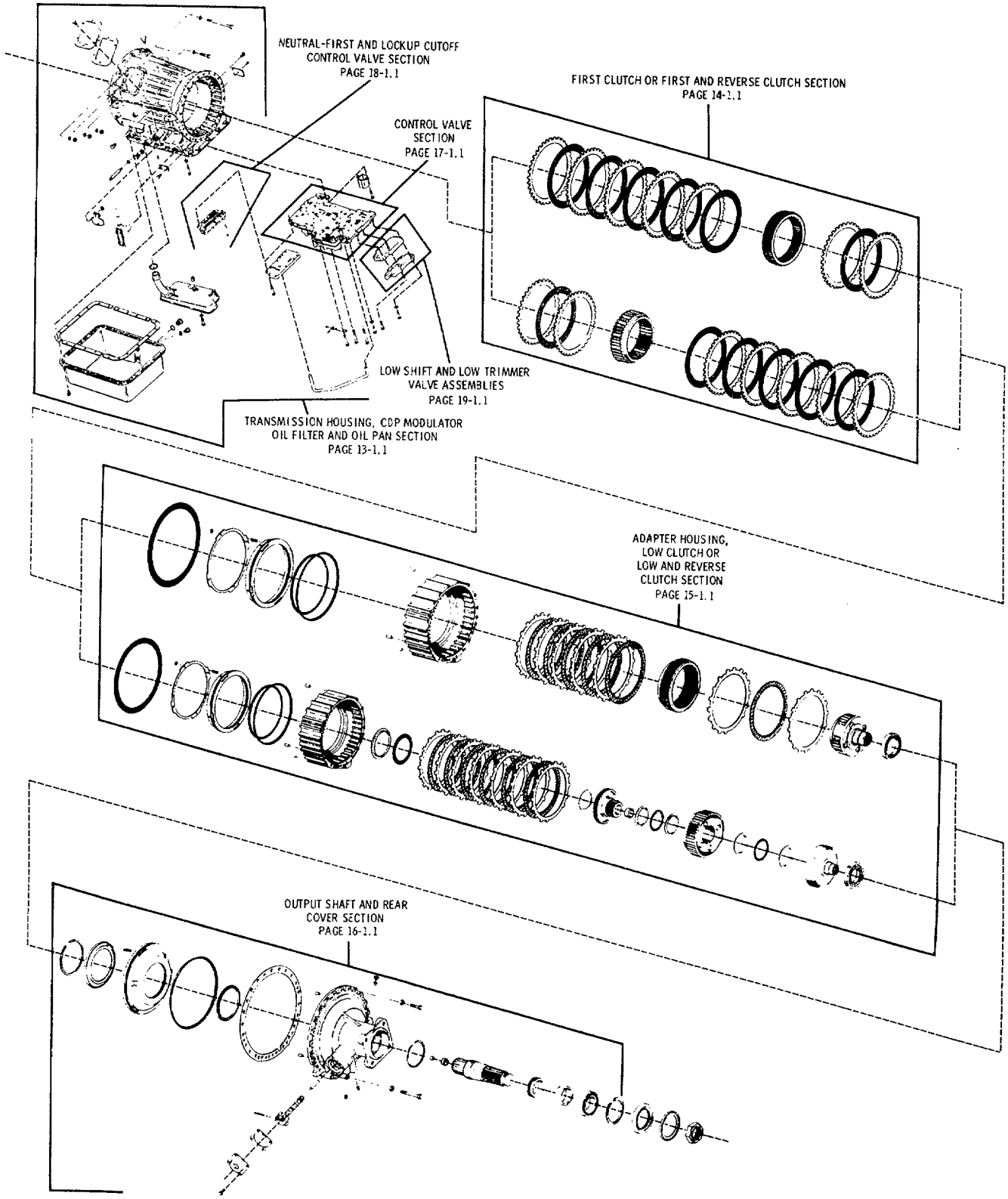

HT 750 AUTOMATIC TRANSMISSION PICTORIAL INDEX (DRD AND CRD)

06-15-83 COPYRIGHT 1983 GENERAL MOTORS CORP.